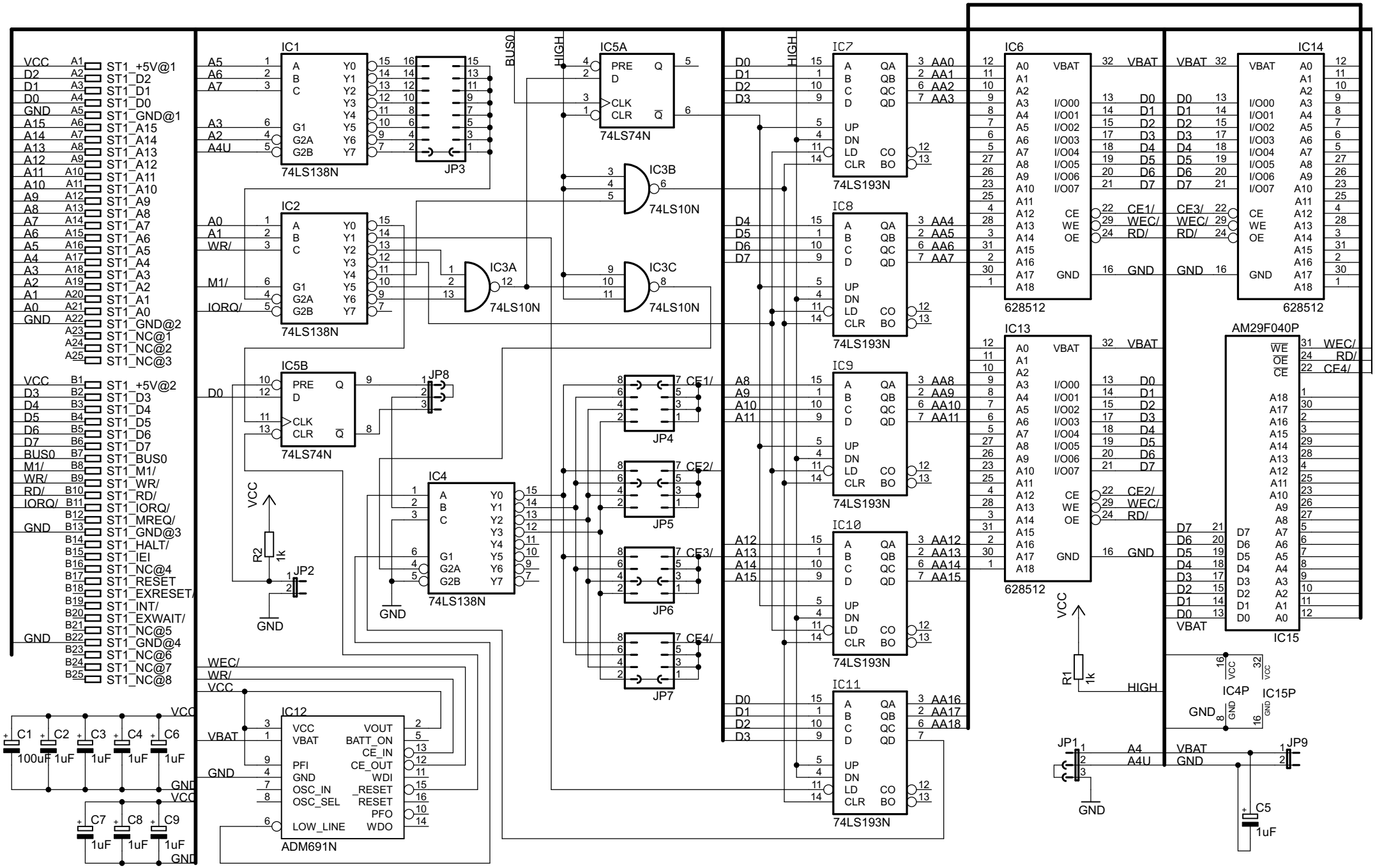
IC1
74LS138N
IC2
74LS138N
IC3A
IC3B
IC3C
74LS10N
IC4
74LS138N
IC5A
IC5B
74LS74N
IC6
628512
IC7
IC8
IC9
IC10
IC11
74LS193N
IC12
ADM691N
IC13
628512
IC14
628512
IC15
AM29F040P
IC4P
IC15P
JP1
JP2
JP3
JP4
JP5
JP6
JP7
JP8
JP9
R1 1k
R2 1k
C1 100uF
C2 1uF
C3 1uF
C4 1uF
C5 1uF
C6 1uF
C7 1uF
C8 1uF
C9 1uF
ST1_+5V@1
ST1_D2
ST1_D1
ST1_D0
ST1_GND@1
ST1_A15
ST1_A14
ST1_A13
ST1_A12
ST1_A11
ST1_A10
ST1_A9
ST1_A8
ST1_A7
ST1_A6
ST1_A5
ST1_A4
ST1_A3
ST1_A2
ST1_A1
ST1_A0
ST1_GND@2
ST1_NC@1
ST1_NC@2
ST1_NC@3
ST1_+5V@2
ST1_D3
ST1_D4
ST1_D5
ST1_D6
ST1_D7
ST1_BUS0
ST1_M1/
ST1_WR/
ST1_RD/
ST1_IORQ/
ST1_MREQ/
ST1_GND@3
ST1_HALT/
ST1_IEI
ST1_NC@4
ST1_RESET
ST1_EXRESET/
ST1_INT/
ST1_EXWAIT/
ST1_NC@5
ST1_GND@4
ST1_NC@6
ST1_NC@7
ST1_NC@8
BUS0
HIGH
VCC
GND
VBAT