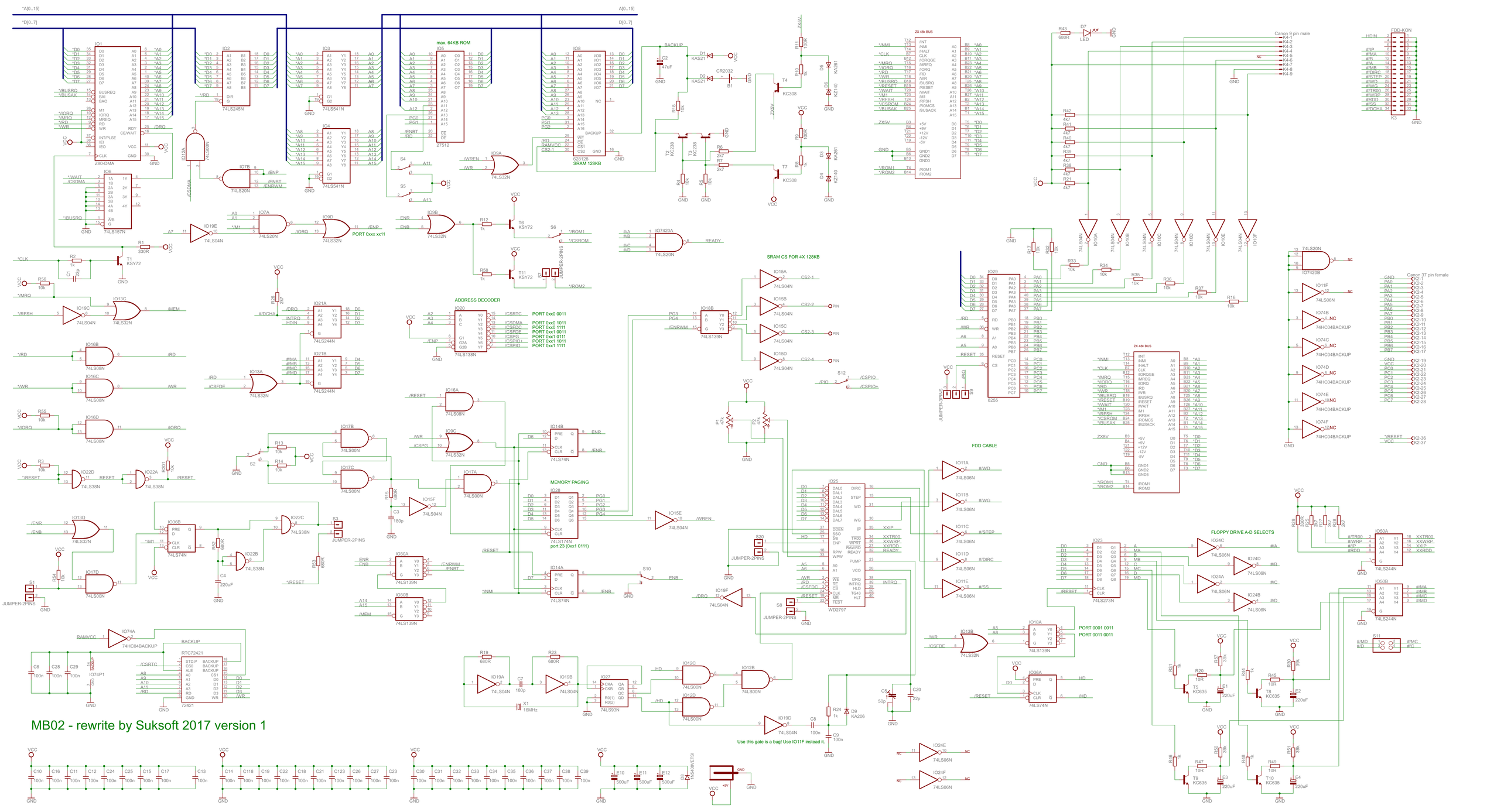
TOP1 TOP2 TOP3 TOP4 BOTTOM2 BOTTOM1
max. 64KB ROM
SRAM 128KB
ZX 48k BUS
Canon 9 pin male
FDD-KON
Z80-DMA
PORT 0xxx xx11
ADDRESS DECODER
PORT 0xx0 0011
PORT 0xx0 1011
PORT 0xx1 0011
PORT 0xx1 0111
PORT 0xx1 1011
PORT 0xx1 1111
SRAM CS FOR 4X 128KB
FDD CABLE
Canon 37 pin female
MEMORY PAGING
port 23 (0xx1 0111)
FLOPPY DRIVE A-D SELECTS
PORT 0001 0011
PORT 0011 0011
Use this gate is a bug! Use IO11F instead it.
MB02 - rewrite by Suksoft 2017 version 1