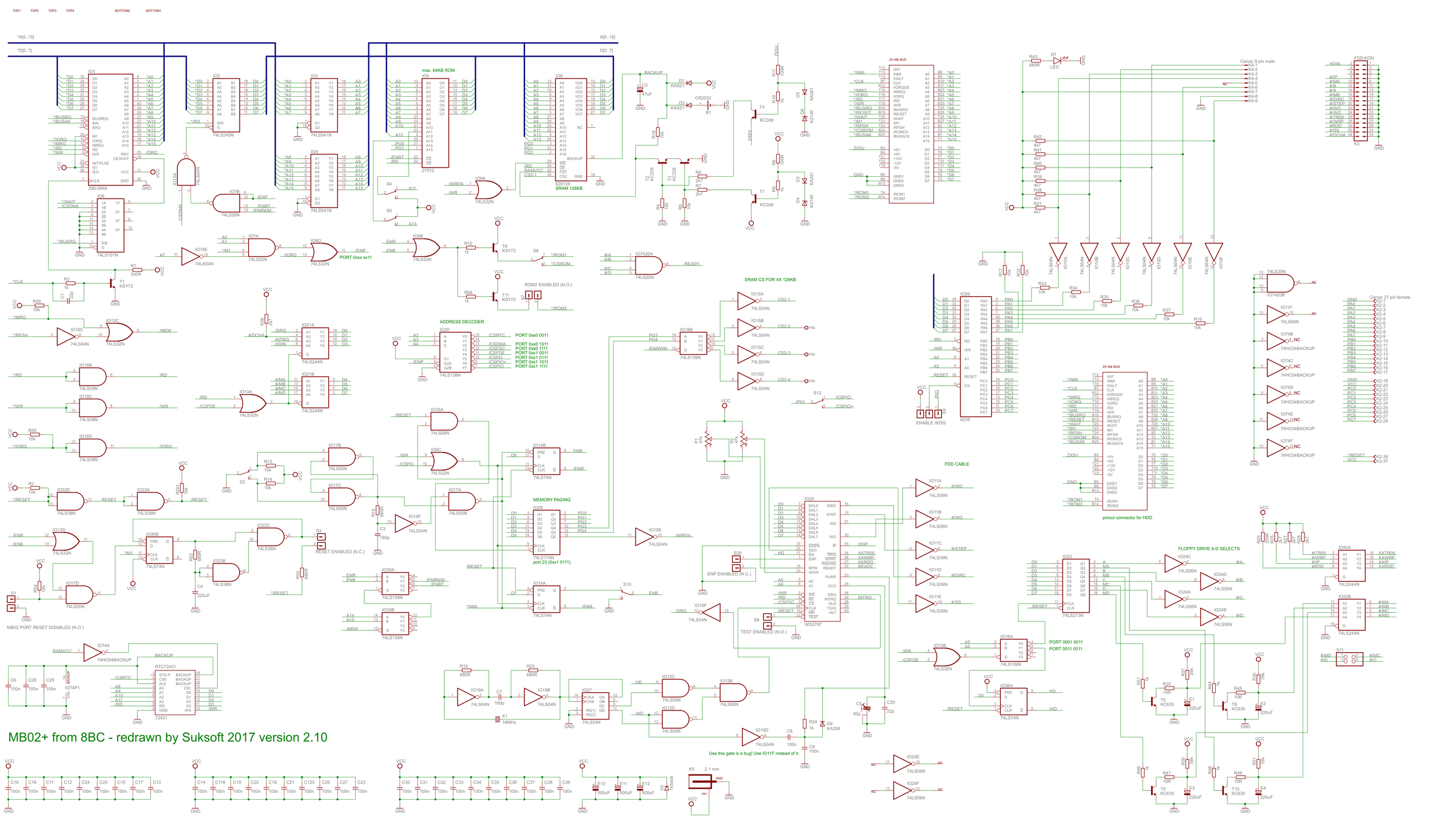
TOP1 TOP2 TOP3 TOP4 BOTTOM2 BOTTOM1
*A[0..15]
*D[0..7]
A[0..15]
D[0..7]
IO1 Z80-DMA
IO2 74LS245N
IO3 74LS541N
IO4 74LS541N
IO5 27512
max. 64KB ROM
IO8 62B128 SRAM 128KB
IO6 74LS157N
IO7 74LS20N
IO9 74LS32N
IO10 74LS04N
IO11 74LS04N
IO12 74LS00N
IO13 74LS32N
IO14 74LS74N
IO15 74LS04N
IO16 74LS08N
IO17 74LS00N
IO18 74LS139N
IO19 74LS04N
IO20 74LS138N
IO21 74LS244N
IO22 74LS38N
IO23 74LS273N
IO24 74LS06N
IO25 WD2797
IO26 74LS93N
IO27 74LS93N
IO28 74LS174N
IO29 8255
IO30 74LS139N
IO31 74LS04N
IO32 74LS04N
IO33 74LS04N
IO34 74LS04N
IO35 74LS04N
IO36 74LS74N
IO37 74LS04N
IO38 74LS04N
IO39 74LS04N
IO40 74LS04N
IO41 74LS04N
IO42 74LS04N
IO43 74LS04N
IO44 74LS04N
IO45 74LS04N
IO46 74LS04N
IO47 74LS04N
IO48 74LS04N
IO49 74LS04N
IO50 74LS244N
IO51 74LS244N
IO52 74LS244N
IO53 74LS244N
IO54 74LS244N
IO55 74LS244N
IO56 74LS244N
IO57 74LS244N
IO58 74LS244N
IO59 74LS244N
IO60 74LS244N
IO61 74LS244N
IO62 74LS244N
IO63 74LS244N
IO64 74LS244N
IO65 74LS244N
IO66 74LS244N
IO67 74LS244N
IO68 74LS244N
IO69 74LS244N